Black Rock Lock
Controls Replacement and Addition of Interlocks

Black Rock Lock

Connecting Lake Erie to the Erie Barge Canal

Overview

- Scope of Project
- Plan of Attack
- SOW Development
- Advertisement and Award(s)
- Contractor Submittals and Initial Lessons Learned
- Progress to Date

Scope of the Project

- Replace 25+ year old controls that are failing
  - Electrical and mechanical failures
- Add Interlocks per FRAGO 5
  - Currently no interlocks exist
  - Need to implement Key Task 3 of OPORD 2009-4

Old Control Stations

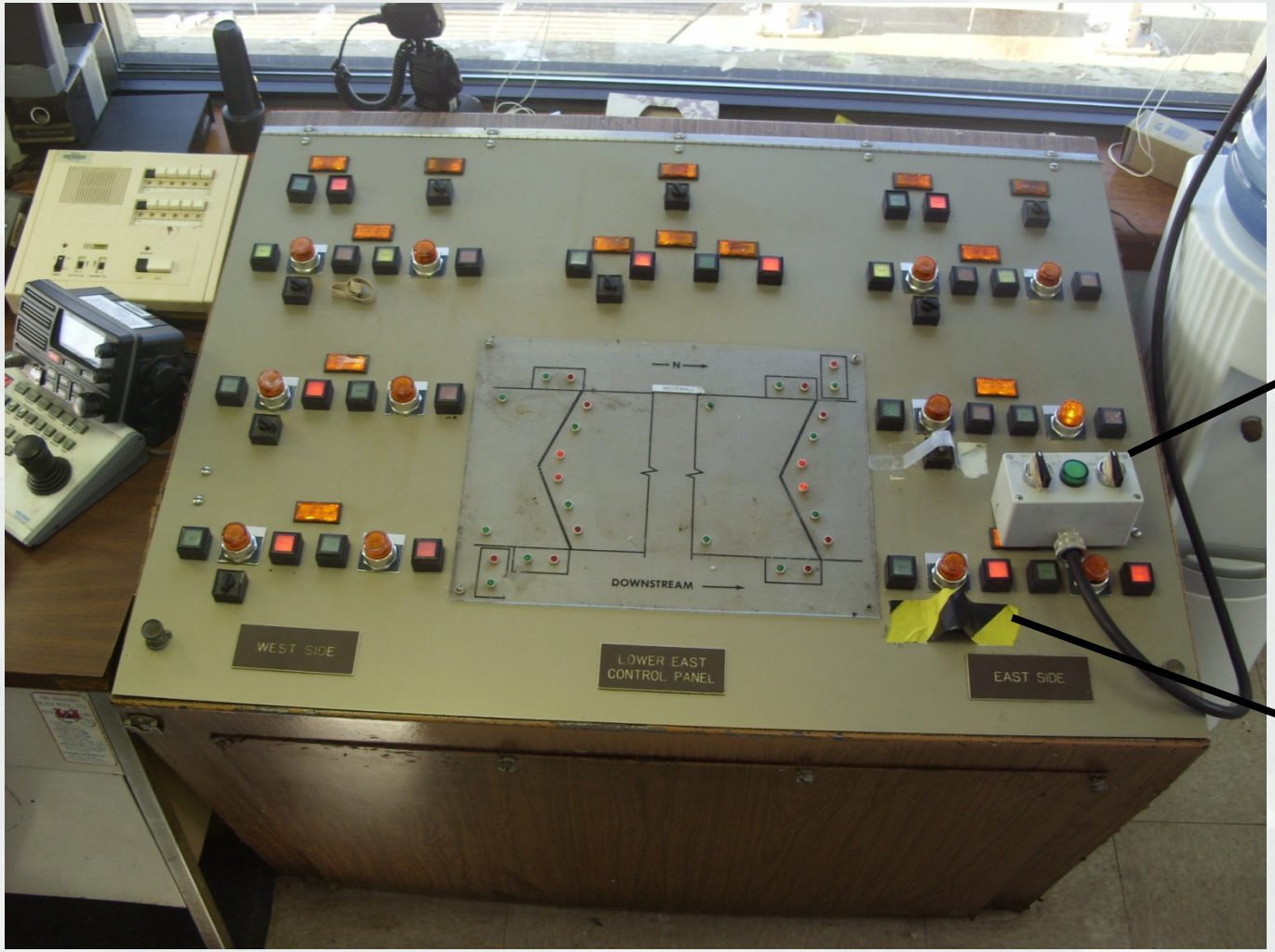

Temporary control box

Taped over controls

Plan of Attack

- Design-Build Contracting
  - Previous good experience with DB
  - Limited time and available design talent
  - Lock Staff input

- Phase the Project
  - Separable Phases
  - Fund across FY

- Safety Processor
  - Approved by LRD
  - Expected lower cost
  - Expected to be approved in new interlock standard

SOW Development

- Determine Basic Requirements
  - New Controls Functions
  - Interlock Requirements
  - Construction Constraints

- Iterative Process
  - Meet with Lock Staff and discuss needs and constraints
  - Document decisions made (PowerPoint & Word Documents)
  - Review and meet again to further refine SOW

Final SOW Product

- Scope of Work Consisted of
  - Word document to define requirements
  - PowerPoint slides to provide visual overview of requirements and concept drawings
  - Safety requirements

- The following slides were included in the bid documents

Control Stations

Upper West Local Control Station
•Remote Mode- the PLC receives signals from and sends commands to the I/O rack for the upper west equipment
•Local Mode- pushbuttons on the cabinet directly operate the solenoids for opening/closing the valves and gates and starting/stopping the HPU

Lower West Local Control Station
•Remote Mode- the PLC receives signals from and sends commands to the I/O rack for the lower west equipment
•Local Mode- pushbuttons on the cabinet directly operate the solenoids for opening/closing the valves and gates and starting/stopping the HPU

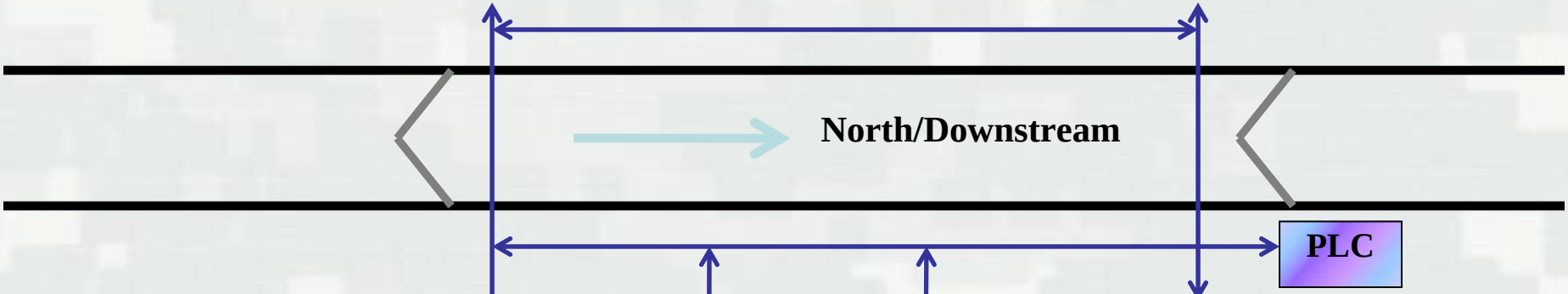

Upper East Operator Station
•Normal Mode- the PLC receives signals from this station and sends commands to the I/O racks for the upper east & west equipment.
•Remote Mode- allows control of the upper east and west equipment from the PLC via commands from the lower east station

Lower East Operator Station
•Normal Mode- the PLC receives signals from this station and sends commands to the I/O racks for the lower east & west equipment
•Remote Mode- allows control of the lower east & west equipment from the PLC via commands from the upper east station

Upper East Local Control Station
•Remote Mode- the PLC receives signals from and sends commands to the I/O rack for the upper west equipment
•Local Mode- pushbuttons on the cabinet directly operate the solenoids for opening/closing the valves and gates and starting/stopping the HPU

Upper East Local Control Station
•Remote Mode- the PLC receives signals from and sends commands to the I/O rack for the upper west equipment
•Local Mode- pushbuttons on the cabinet directly operate the solenoids for opening/closing the valves and gates and starting/stopping the HPU

Panels

- East Operator Stations
  - Primary operator interfaces
  - Either panel will have the capability of controlling either set of gates
  - All operator inputs go through the Safety PLC which in turn commands all outputs to cylinder directional control valve solenoids, etc
  - Safety shutdown wired in series with PLC control of HPUs

- East & West Local Control Stations
  - Secondary operator interfaces
  - Can be operated in either a remote mode where they operate as slaves to the PLC safety processor or in a local mode to provide for basic control of gate motion, culvert valve and gate mounted valves via hand operated switches for that gate only Local operation will primarily be a maintenance function but can also provide emergency operation.

Control Scheme

- The Safety PLC receives inputs from the upper and lower east operator stations
- The Safety PLC then sends commands to the Input/Output (I/O) racks at each of 4 local control stations
- The east & west local control stations will have I/O racks that send commands to the equipment from the PLC when in the remote mode. In the local mode, pushbuttons on these local control stations will command gate and valve movement along with HPU on/off. Local mode requires key switch operation.
- The operator stations will have a normal mode where commands from then will go to the PLC and thereby control all operations at the respective end of the lock. In the remote mode, control of that end of the lock will be from the other control station.

Communications

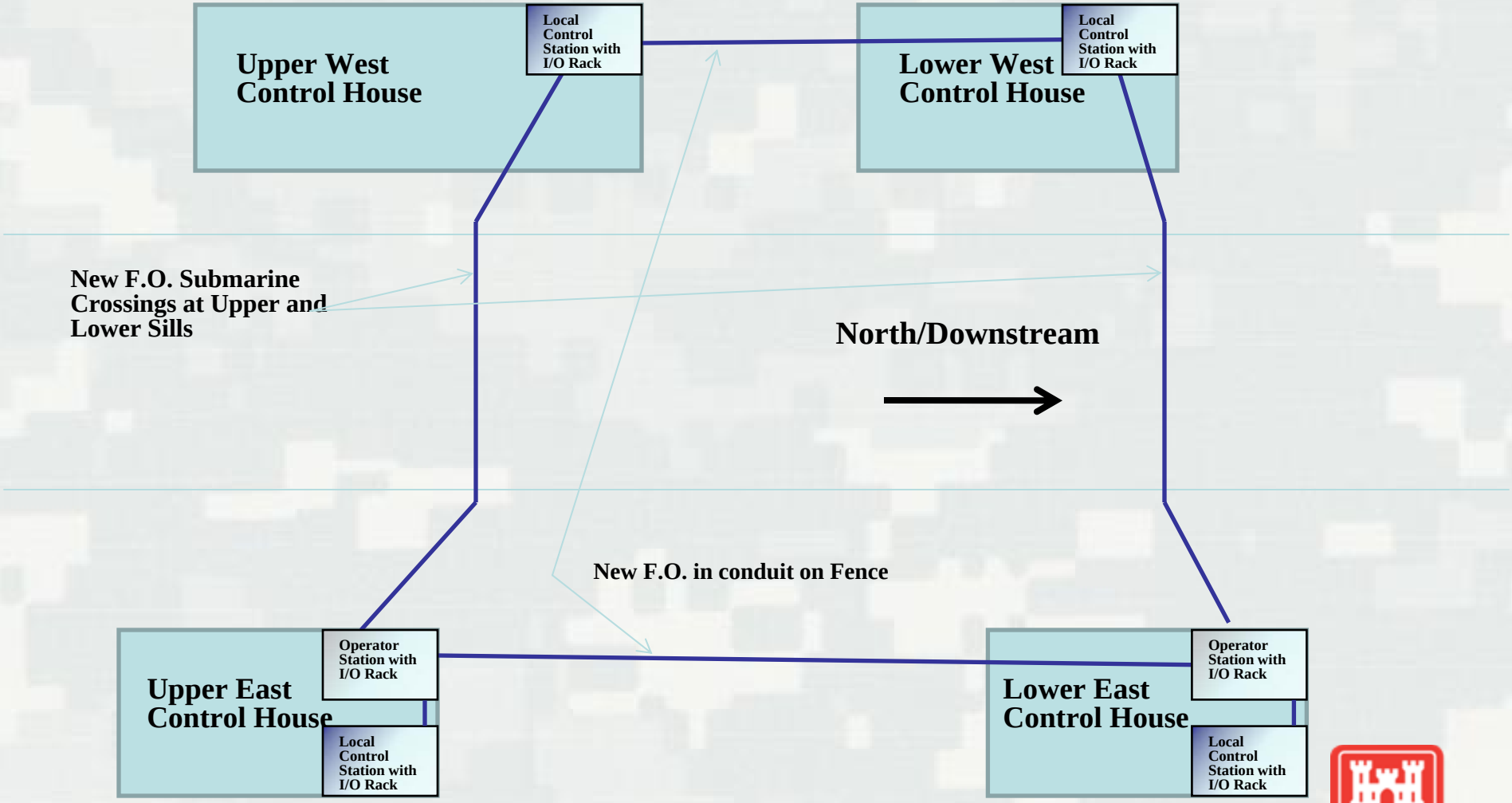

New Fiber Optic communications lines in a ring configuration joining 4 control stations
Approximate run between the north and south houses on each side is 1,000 feet
Approximate run between east and west houses at each end is 290 feet

BUILDING STRONG®

Communications Cabling

- Fiber Optic (F.O.) cable between control houses
- Multi-conductor cable used to provide redundant lines
- Loop configuration to provide redundancy (e.g. if one crossing is lost, alternative routing provides connectivity) i.e. Ethernet Industrial Protocol configuration

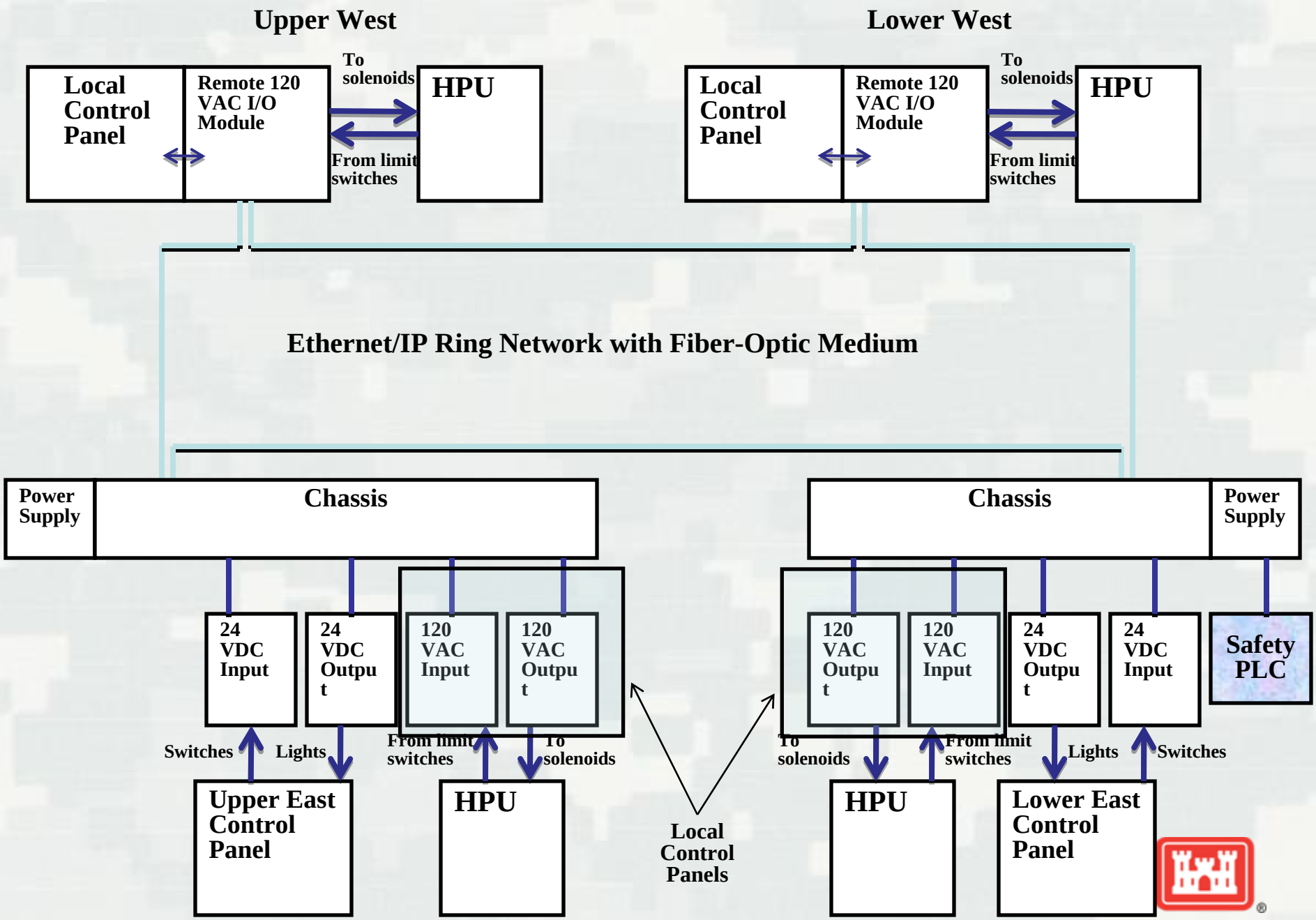

Upper East

Concept Diagram

Lower East

BUILDING STRONG®

Lower East Controls & Sensors

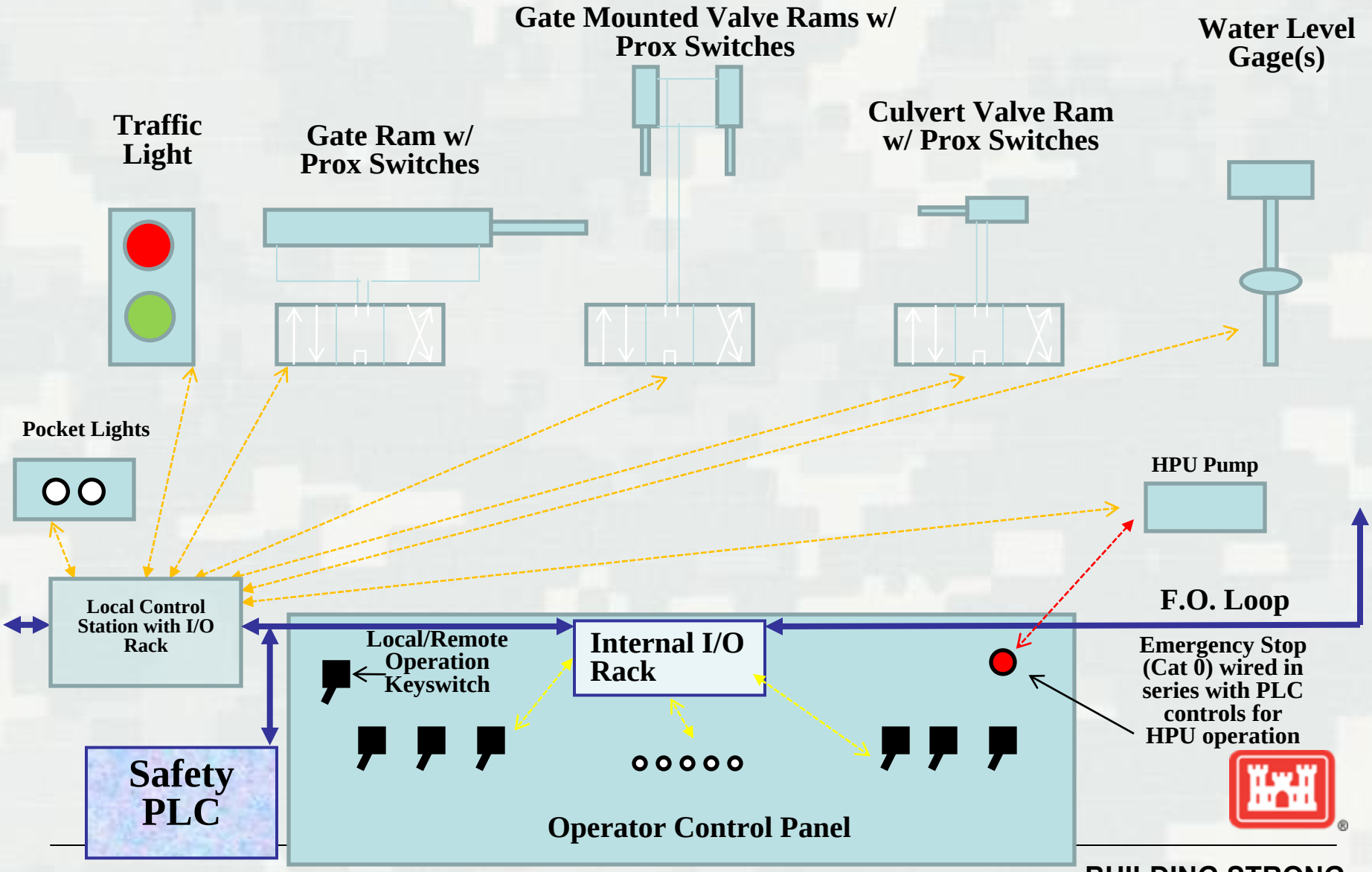

BUILDING STRONG®

Upper East Controls & Sensors

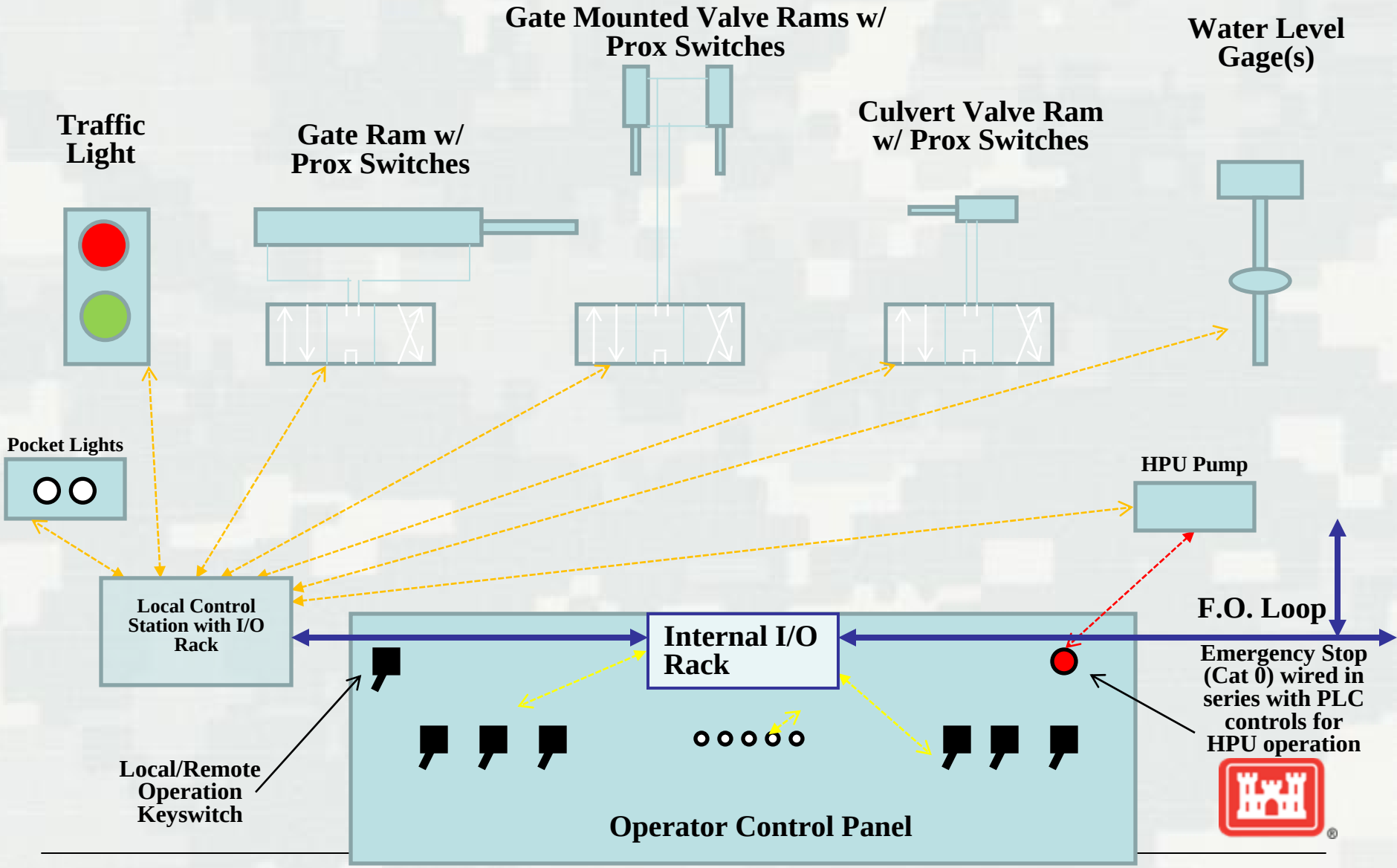

Upper East I/O Racks Points

- Outputs
  - Gate open
  - Gate close
  - Culvert valve open
  - Culvert valve close
  - Gate valves open
  - Gate valves close
  - HPU on
  - HPU off
  - Traffic light green
  - Traffic light red
  - Pocket lights on
  - Pocket lights off
  - Panel lights (x many)
  - Panel light for upper west in local mode
  - Panel light for lower west in local mode
  - Panel light for control of lower end equipment given

- Inputs
  - Gate prox sw open
  - **Gate prox sw close**
  - **Culvert valve prox sw** open
  - **Culvert valve prox sw** close
  - **Gate valves prox sw** open (x2)
  - **Gate valves prox sw** close (x2)
  - Hydraulic oil pressure x-ducer
  - **Upper pool level**
  - Chamber water level
  - **Traffic light confirmation**
  - Interlocks In
  - **Interlocks Out**

Lower East I/O Racks Points

- Outputs
  - Gate open
  - Gate close
  - Culvert valve open
  - Culvert valve close
  - Gate valves open
  - Gate valves close
  - HPU on
  - HPU off
  - Traffic light green
  - Traffic light red
  - Pocket lights on
  - Pocket lights off
  - Panel lights (x many)
  - Panel light for lower west in local mode

- Inputs
  - Gate prox sw open
  - **Gate prox sw close**
  - **Culvert valve prox sw** open
  - **Culvert valve prox sw** close
  - **Gate valves prox sw** open (x2)
  - **Gate valves prox sw** close (x2)
  - Hydraulic oil pressure x-ducer
  - **Local operation mode**
  - Remote operation mode
  - **Lower pool level**
  - Traffic light confirmation

West Controls & Sensors, typical of 2

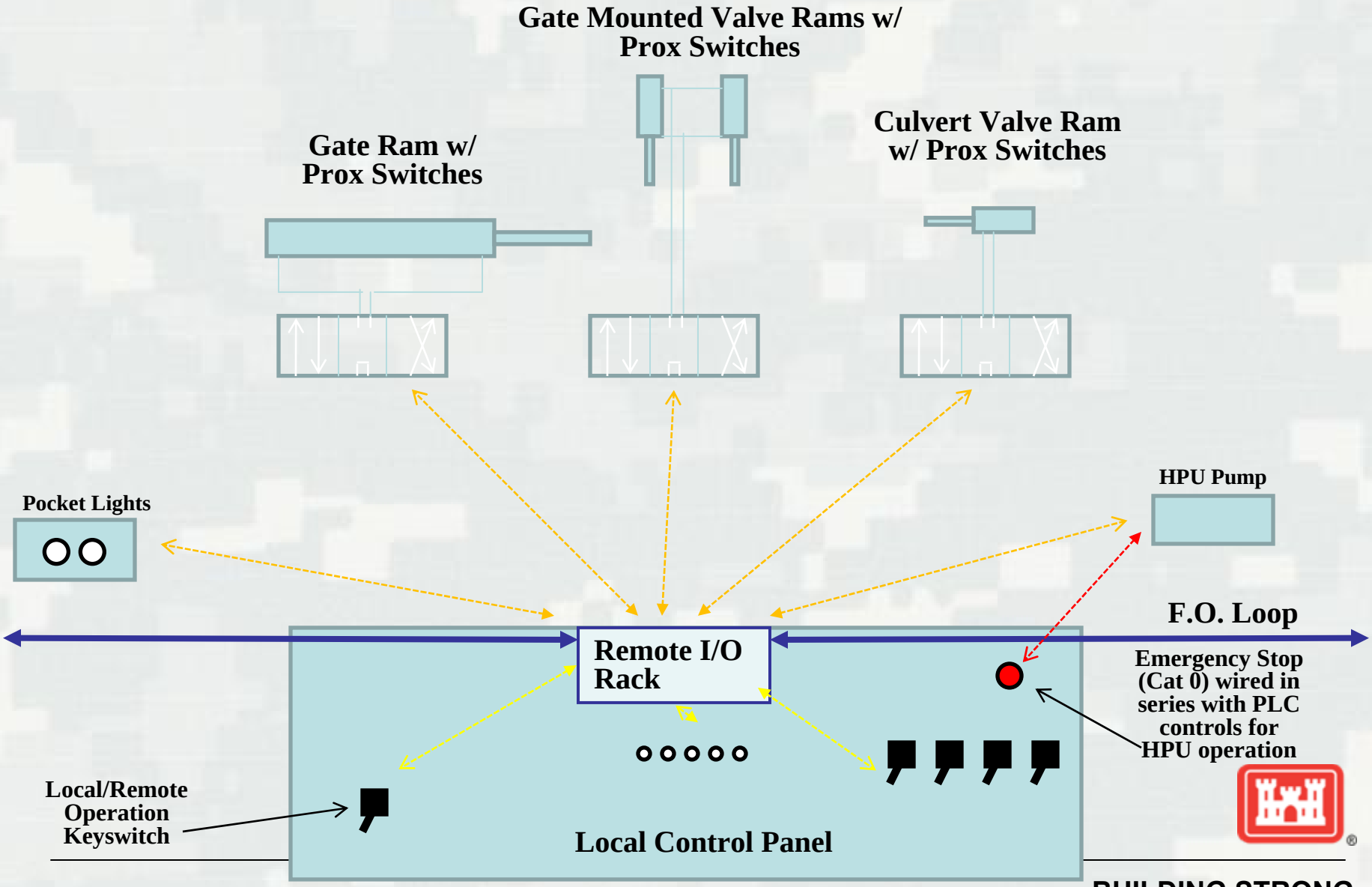

BUILDING STRONG®

West I/O Racks Points

- Outputs
  - Gate open
  - Gate close
  - Culvert valve open
  - Culvert valve close
  - Gate valves open
  - Gate valves close
  - HPU on
  - HPU off
  - Pocket lights on
  - Pocket lights off

- Inputs
  - Gate prox sw open
  - **Gate prox sw close**
  - **Culvert valve prox sw** open
  - **Culvert valve prox sw** close
  - **Gate valves prox sw** open (x2)
  - **Gate valves prox sw** close (x2)
  - Hydraulic oil pressure x-ducer
  - **Local operation mode**

Safety Shutdown Configuration
Cat 0 Emergency Stop
(Lower end shutdown shown, upper similar)

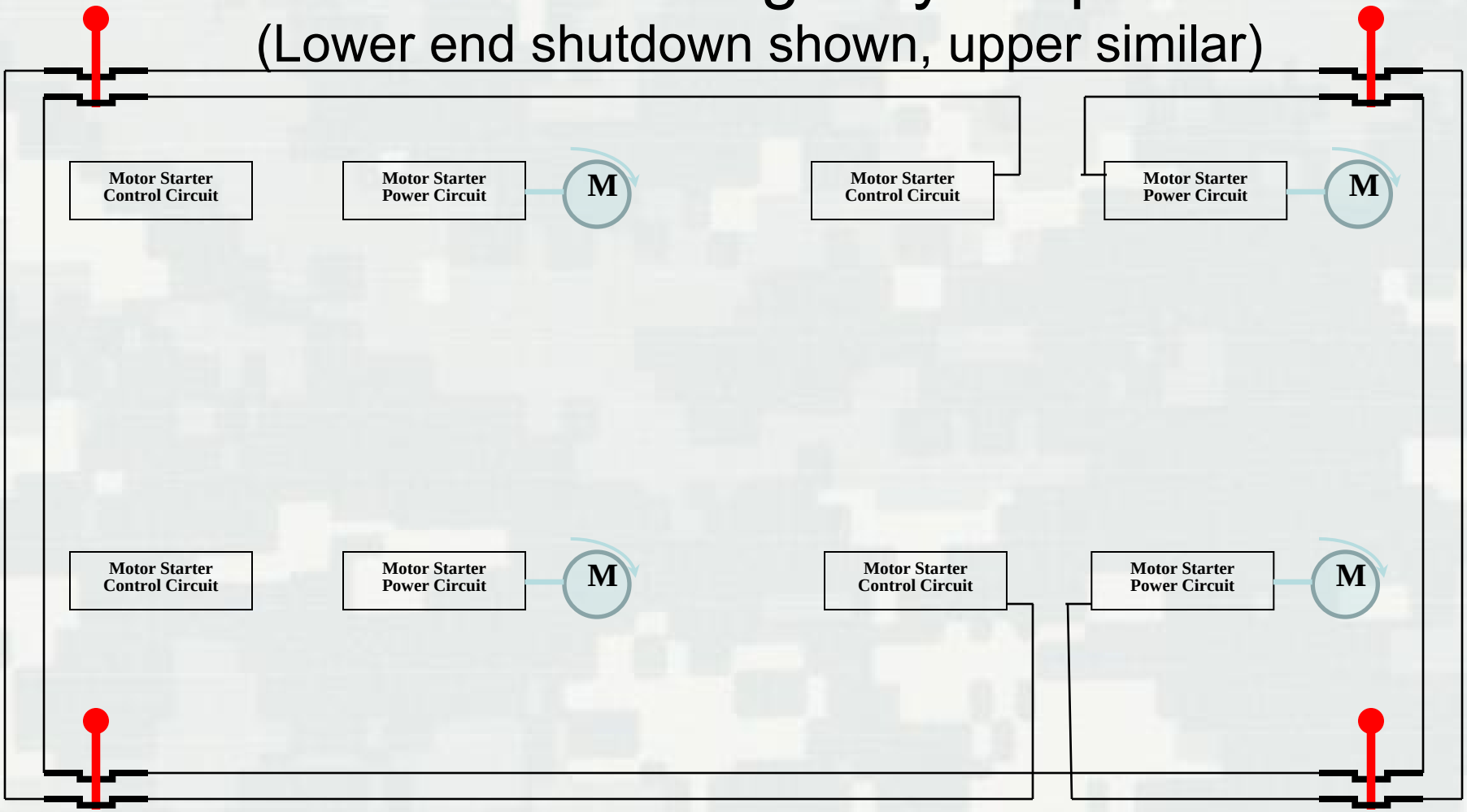

Local Control Panel Layout

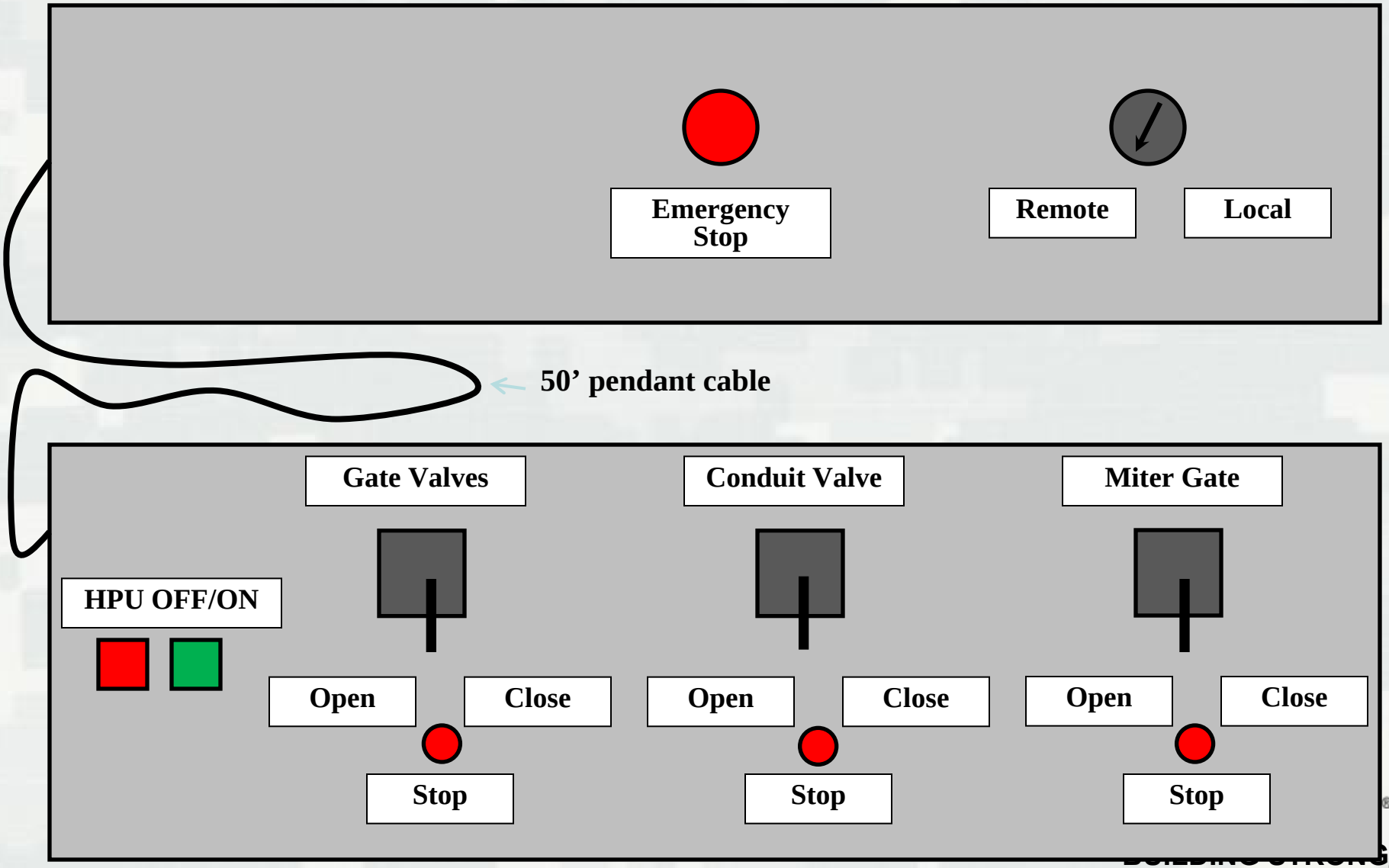

Operator Control Panel Concept
Lower Portion

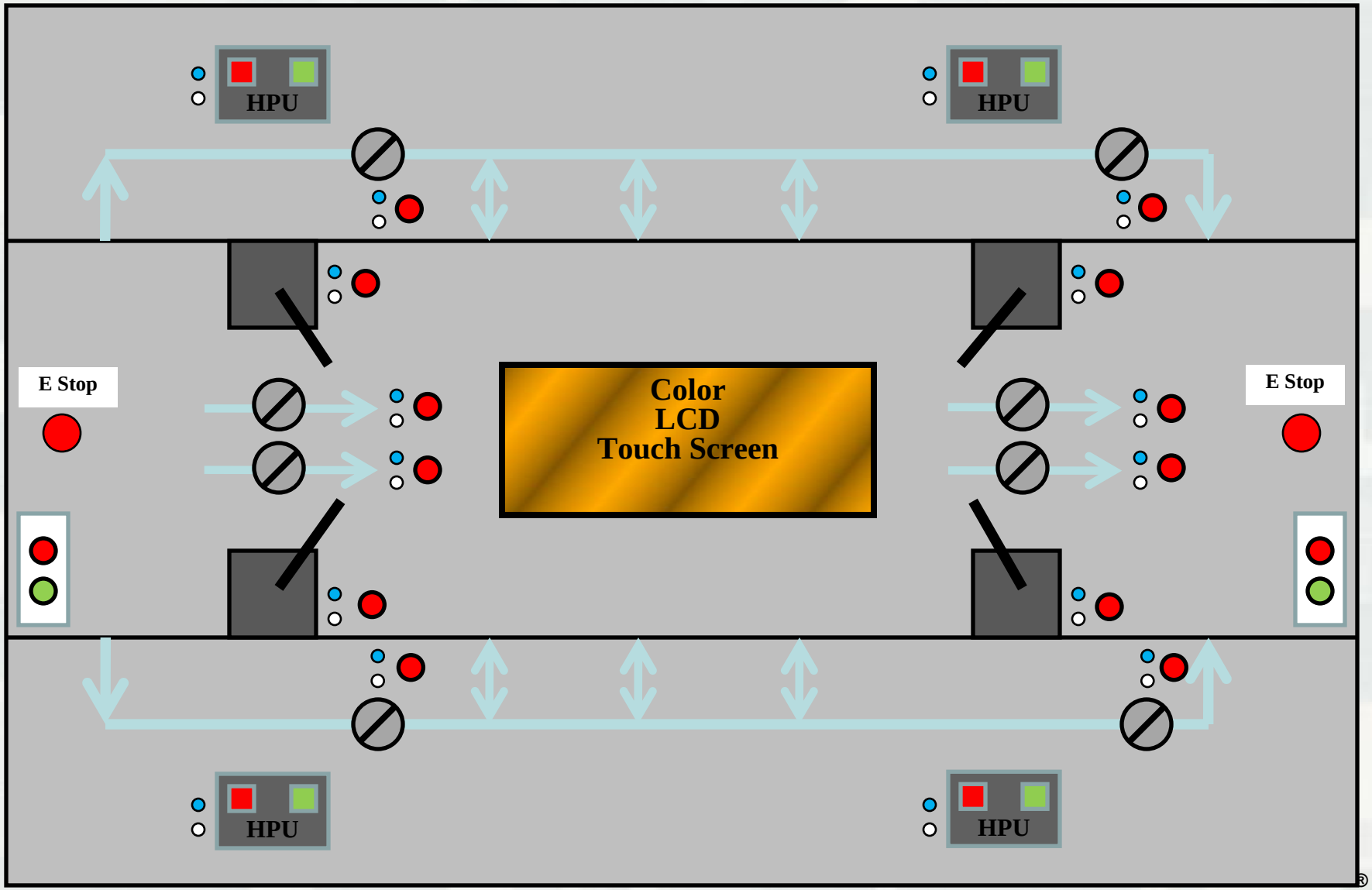

Operator Control Panel Concept
Upper Portion

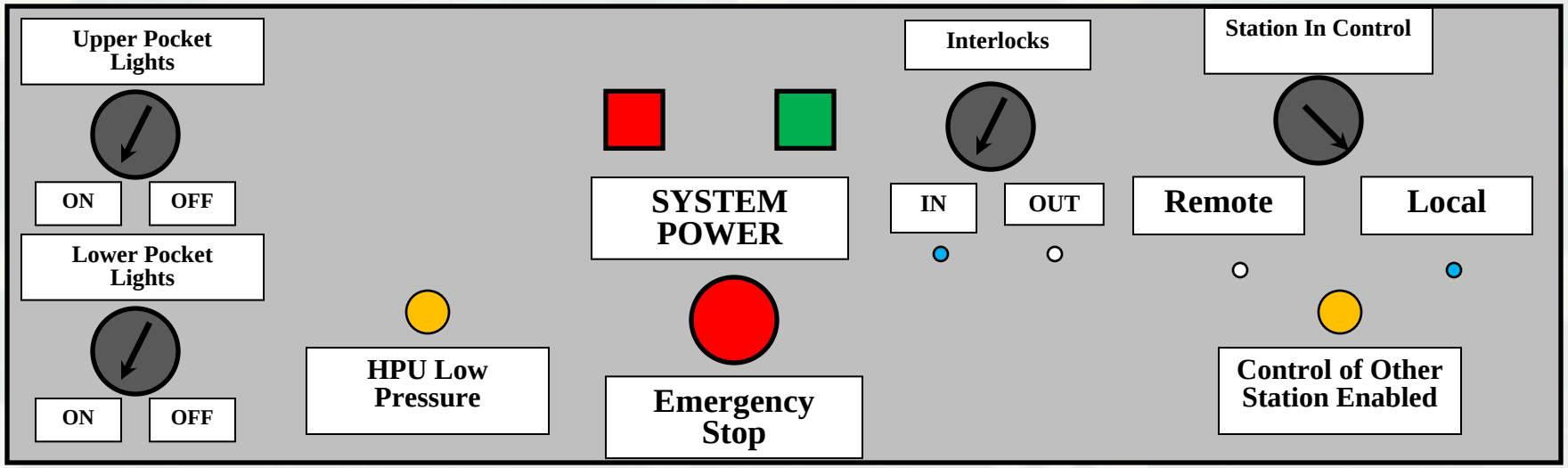

Control Operation and Interlocks

- Basic operation is that switches send signals to the PLC, PLC logic processes the request and outputs required signals to I/O racks
- Gate movement not allowed unless all valves at the opposite end are closed and all culvert valves at the corresponding end are open. If a valve changes from the commanded and necessary position during gate transit that valve is re-commanded to the correct position, and alarm is given and gate movement is halted.
- Gate movement not allowed unless the traffic light at the corresponding end is red
- Alarm given if cylinders do not reach a commanded position within a predetermined amount of time unless the control is neutralized during transit
- Alarm for low hydraulic oil pressure
- LCD displays included on panels for information output; water levels, HPU pressures, alarm/warning conditions, etc
- Key operated switch at the upper east operator panel allows interlocks out operation
- Transfer of control to the other station not allowed when HPU pumps are running

SOW Language

- Key Sections
  - Project standards
  - Individual work items
    - Base bid
    - Optional items to be awarded later
    - Timeline and liquidated damages

Standards (1/4)

- Materials-
  - Materials are to be schedule 80 PVC conduit, stainless steel wall clips, stainless steel hardware.
  - Switches, indicator lights, etc shall be of waterproof construction.
  - Switches, indicator lights, etc shall 30 mm standard products.
  - Switches shall be of the dual contact safety type.
  - The control reliable safety PLC (dual channel) and associated hardware (switches, contactors, etc) shall be of the type that provides inherent safety, i.e. meets the requirements of Safety Integrity Level 3 (SIL-3).
  - Exterior enclosures shall be NEMA 4X and indoor enclosures shall be NEMA 12.
  - All new conductors shall be copper.
  - Fiber Optic (FO) cable shall be multimode, minimum 6 strand, rated for outdoor use with the exception of being rated for submerged use for the runs making underwater crossings.
  - All methods, materials and items not otherwise specified shall be rated for the location of the installation.
  - All products shall be UL listed.
  - All products shall be manufacturer's standard items, i.e. no custom components.

Standards (2/4)

Design Standards-

- **New control panels shall fit within the footprint of the existing upper house control station, i.e. 4’ 8” wide, 2’ 10” deep. The main working surface shall be flat with a vertical back surface, 8” tall. The main working surface should be 3’ above the floor level.**
- **The surfaces shall be constructed/coated in order to reduce glare. Construction materials shall be aluminum, Plexiglas, etc. Wood construction is not acceptable.**
- **The type and operation of controls should mimic the item being operated. Switches shall be momentary contact switches with automatic return to center.**
- **Valves controlling water flow should be controlled by 90 degree turn switches set up so that movement of the switch parallel to the direction of flow the valve will command flow and movement of the switch perpendicular to the direction of flow the valve will command blocking of flow.**

Standards (3/4)

Design Standards-

- **Switches controlling gate movement should be set up so that the orientation of the switch movement corresponds to the commanded position of the gate.**
- **Reversal of a momentary contact switch will not reverse the direction of cylinder movement, instead the corresponding stop button must be pressed before commanding movement of the cylinder in the opposite direction.**
- **Indicator lights for the valves and gates shall display blue for the "safe" position and white for the "unsafe" position. Valves are "safe" when in the position blocking flow and gates are "safe" when closed/mitered. The hydraulic power units are "safe" when not running.**
- **NOTE: During normal cylinder movement and when cylinder movement has been stopped by operator command the position indicator lights shall blink alternatively for ½ second on and ½ second off.**
- **Indicator lights shall be push to test**
- **Controls and indicators shall be low voltage circuits.**
- **The interlock and safety functions shall reside in a safety PLC per control reliable standards.**

Standards (4/4)

Work Requirements and Methods-

- **Replacement shall include new conductors and conduit in addition to cabinets, enclosures, fixtures, hardware, etc.**
- **All scrap will become the property of the contractor and shall be removed and disposed of off site.**
- **Contractor shall clean up all work areas at the end of each day's work.**
- **The replacement of all conduit, conductors, junction boxes, fixtures and similar items shall be installed to match the same footprint as the item(s) being replaced. Any significant deviation from the existing footprint shall be approved by the Contracting Officer prior to the beginning of the work on that item.**
- **One hard copy and one electronic copy of the as-built schematics shall be supplied.**

Safety Integrity Level 3 (SIL-3)

- **Safety Integrity Level** (SIL) is defined as a relative level of risk-reduction provided by a safety function, or to specify a target level of risk reduction. In simple terms, SIL is a measurement of performance required for a Safety Instrumented Function (SIF).
- The requirements for a given SIL are not consistent among all of the functional safety standards. In the European Functional Safety standards based on the IEC EN 61508 standard four SILs are defined, with SIL 4 being the most dependable and SIL 1 being the least. A SIL is determined based on a number of quantitative factors in combination with qualitative factors such as development process and safety life cycle management.
- The International Electrotechnical Commission's (IEC) standard IEC 61508, now IEC EN 61508, defines SIL using requirements grouped into <u>two broad categories: hardware safety integrity and systematic safety integrity</u>. A device or system must meet the requirements for *both* categories to achieve a given SIL.
- The SIL requirements for hardware safety integrity are based on a probabilistic analysis of the device. To achieve a given SIL, the device must meet targets for the maximum probability of dangerous failure and a minimum Safe Failure Fraction. The concept of 'dangerous failure' must be rigorously defined for the system in question, normally in the form of requirement constraints whose integrity is verified throughout system development. The actual targets required vary depending on the likelihood of a demand, the complexity of the device(s), and types of redundancy used.

- PFD (Probability of Failure on Demand) and RRF (Risk Reduction Factor) of low demand operation for different SILs as defined in IEC EN 61508 are as follows:

SIL	Probability of Failure/Hour (PFH)	PFH (power)	Risk Reduction Factor
1	0.1-0.01	10^{-1} - 10^{-2}	10-100
2	0.01-0.001	10^{-2} - 10^{-3}	100-1,000
3	**0.001-0.0001**	**10^{-3} - 10^{-4}**	**1,000-10,000**
4	0.0001-0.00001	10^{-4} - 10^{-5}	10,000-100,000

The following standards use SIL as a measure of reliability and/or risk reduction:

- ANSI/ISA S84 (Functional safety of safety instrumented systems for the process industry sector)
- IEC EN 61508 (Functional safety of electrical/electronic/programmable electronic safety related systems)
- IEC 61511 (Safety instrumented systems for the process industry sector)
- IEC 62061 (Safety of machinery)
- EN 50128 (Railway applications - Software for railway control and protection)
- EN 50129 (Railway applications - Safety related electronic systems for signalling
- EN 50402 (Fixed gas detection systems)
- MISRA, various (Guidelines for safety analysis, modelling, and programming in automotive applications)
- Defence Standard 00-56 Issue 2 - accident consequence
- The use of a SIL in specific safety standards may apply different number sequences or definitions to those in IEC EN 61508.

SIL-3 Example

- High-integrity Pressure Protection System (HIPPS)
- Used in the process industry to provide protection against overpressure through an instrumentation system instead of relief valves
- HIPPS requires that all major components be SIL-3 approved

A system that closes the source of over-pressure within 2 seconds with at least the same reliability as a safety relief valve is usually called a HIPPS. Such a HIPPS is a complete functional loop consisting of:

- Sensors, (or initiators) that detect the high pressure
- A logic solver, which processes the input from the sensors to an output to the final element
- Final elements, that actually perform the corrective action in the field by bringing the process to a safe state. In case of a HIPPS this means shutting-off the source of overpressure. The final element consists of a valve, actuator and solenoids.

Advertisement and Award(s)

Initial award was for items 1-6

- **Base bid, items 1-2, lower fiber optic crossing and lower control stations**
- **Items 3-4, upper fiber optic crossing and upper control stations**
- **Item 5, fiber optic runs between the upper and lower stations**
- **Item 6, networking and interlocks**

Awarded all other options in October

- **Item 7, emergency stop circuits**
- **Items 8-9, spare parts packages**
- **Item 10, new prox switches for cylinders for gate mounted valves (contractor opted to replace cylinders and switches with new vice reworking the cylinders)**
- **Item 11, water level transducers**

Submittals and Initial Lessons Learned

- Initial submittals were to be 30% design with second submittal at the 90% design point. Initial submittals were closer to 75-80% design.
  - Lesson learned was to better specify product and time line as percent design is a nebulous standard

- Since SIL3 is a system rating, different people had different ideas as to how to get there.
  - Have the review team concentrate on keeping an eye on what the final product requirements are, not the path to get there

Submittals and Initial Lessons Learned

- The controls subcontractor was often confused as to what was required.
  - Lesson learned was to be brutally simple and obvious.

- The controls subcontractor was under the impression based on initial conversation that the pendant stations could perform control via the PLC/Safety Processor.
  - Similar lesson learned as above.
  - Spell out that these controls are independent of the PLC system and are a maintenance and fail safe method of operating the lock equipment.

"Replacement will include new local control stations, one in the lower east control house and one in the lower west control house. These local control stations will operate the equipment, either from a signal from the safety PLC when in the remote mode or from cabinet mounted switches when in the local mode. "

Work in Progress

Contractor submittals being finalized

Diving to install underwater crossings in progress

Operator station and local control panels being constructed

Time to Play The Price is Right

- Base Bid and some optional items awarded in September
- Contractor offered a discount if all items were awarded by the end of October
- **What did the total package cost including credit for the discount?**

$310,637

Awaiting Project Completion
Ed Gawarecki
~~Buffalo~~ Nashville District
(716) 879-4293