US Army Corps of Engineers®

TAINTER GATE TRUNNION PIN AND BUSHING REPLACEMENT MISSISSIPPI RIVER LOCK 11

John Behrens, P.E.

Rock Island District

US Army Corps of Engineers®

Rock Island District

- Primarily a civil works district
- 78,000 square miles
- Portions of 5 states
- Operate 582 miles of 9-foot navigation channel
- 20 locks and dams
- 5 flood control reservoirs

Rock Island District Boundaries

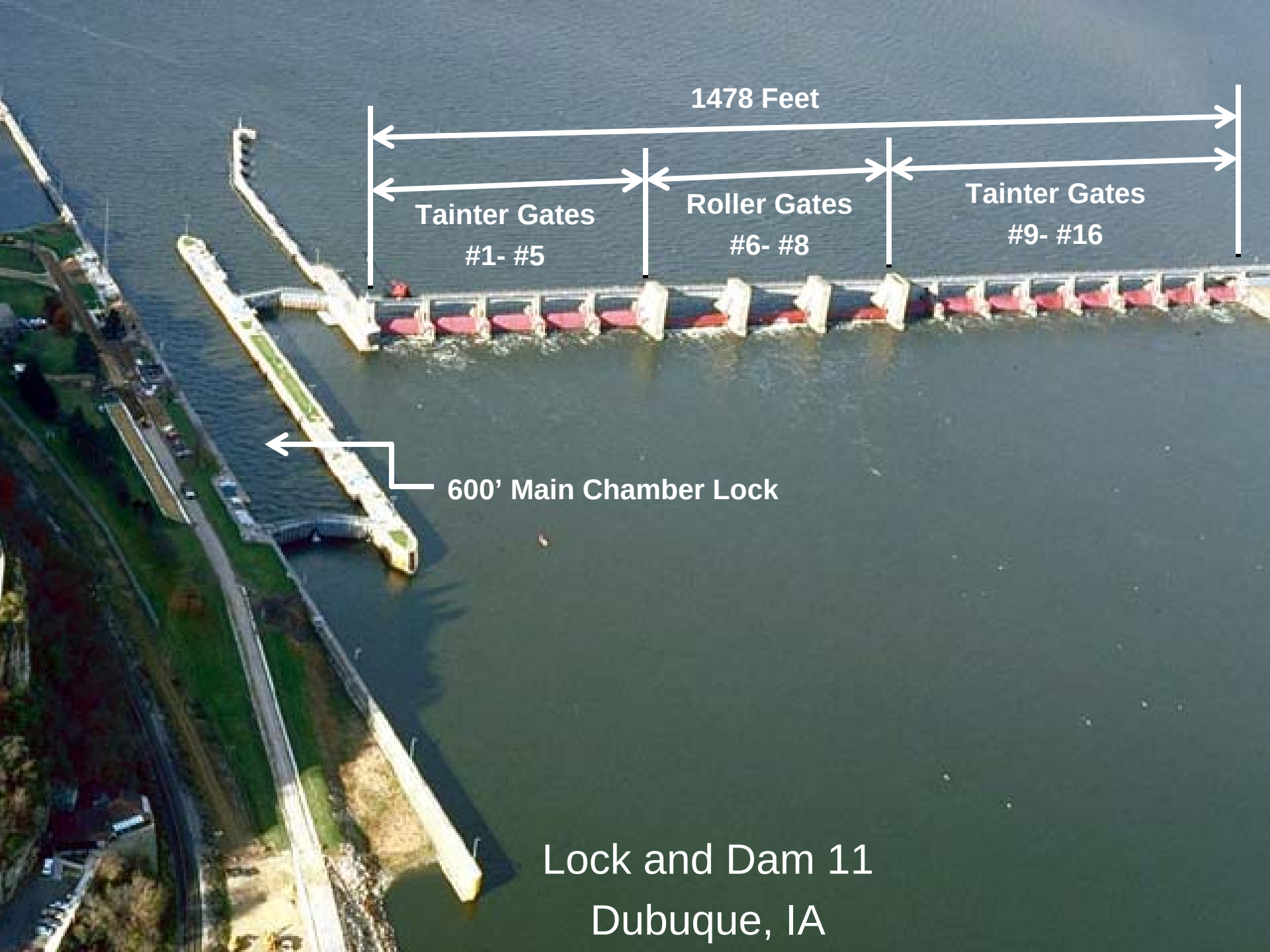

Lock and Dam 11
Dubuque, IA

Lock 11, Mississippi River

US Army Corps of Engineers®

- **Background**
  - 600’ x 110’ Chamber original construction 1937
  - Dam – 1,478 Ft , 13 Tainter Gates, 3 Roller Gates
- **Contract**
  - Major Rehabilitation Stage III
  - Awarded – September FY08
  - Scheduled Completion – FY11
  - Designed In-House by Rock Island District
- **Scope**
  - Replacement of Tainter Gate Machinery
  - Concrete Pier Rehabilitation
  - Service Bridge Decking Replacement
  - Tainter Gate Trunnion Pin/Bushing Replacement
    - (Tainter Gate #14 - $230K, Tainter Gates # 2, 9, 10 - $948K)

US Army Corps of Engineers®

Trunnion Pin/Bushings

- **Problem**
  - Tainter gate trunnion arm bushings were rotated in their trunnion castings. Lock personnel had no method to supply grease to the pivot connection or repair with In-House labor. Systematic problem within Rock Island District.
- **Design/Repair**
  - To replace pin and bushing components with tainter gate in place and restore maintainability of the system.
- **Presentation**
  - Existing Conditions
  - Design Challenges
  - Field Challenges
  - Modifications
  - Lessons Learned

US Army Corps of Engineers®

Trunnion Pin/Bushings

- **Problem**
  - Tainter gate trunnion arm bushings were rotated in their trunnion castings. Lock personnel had no method to supply grease to the pivot connection or repair with In-House labor. Systematic problem within Rock Island District.
- **Design/Repair**
  - To replace pin and bushing components with the tainter gate in place and restore maintainability of the system.
- **Presentation**
  - Existing Conditions
  - Design Challenges
  - Field Challenges
  - Modifications
  - Lessons Learned

US Army Corps of Engineers®

Trunnion Pin/Bushings

- **Problem**
  - Tainter gate trunnion arm bushings were rotated in their trunnion castings. Lock personnel had no method to supply grease to the pivot connection or repair with In-House labor. Systematic problem within Rock Island District.
- **Design/Repair**
  - To replace pin and bushing components with tainter gate in place and restore maintainability of the system.
- **Presentation**
  - Existing Conditions
  - Design Challenges
  - Field Challenges
  - Modifications
  - Lessons Learned

Existing Conditions

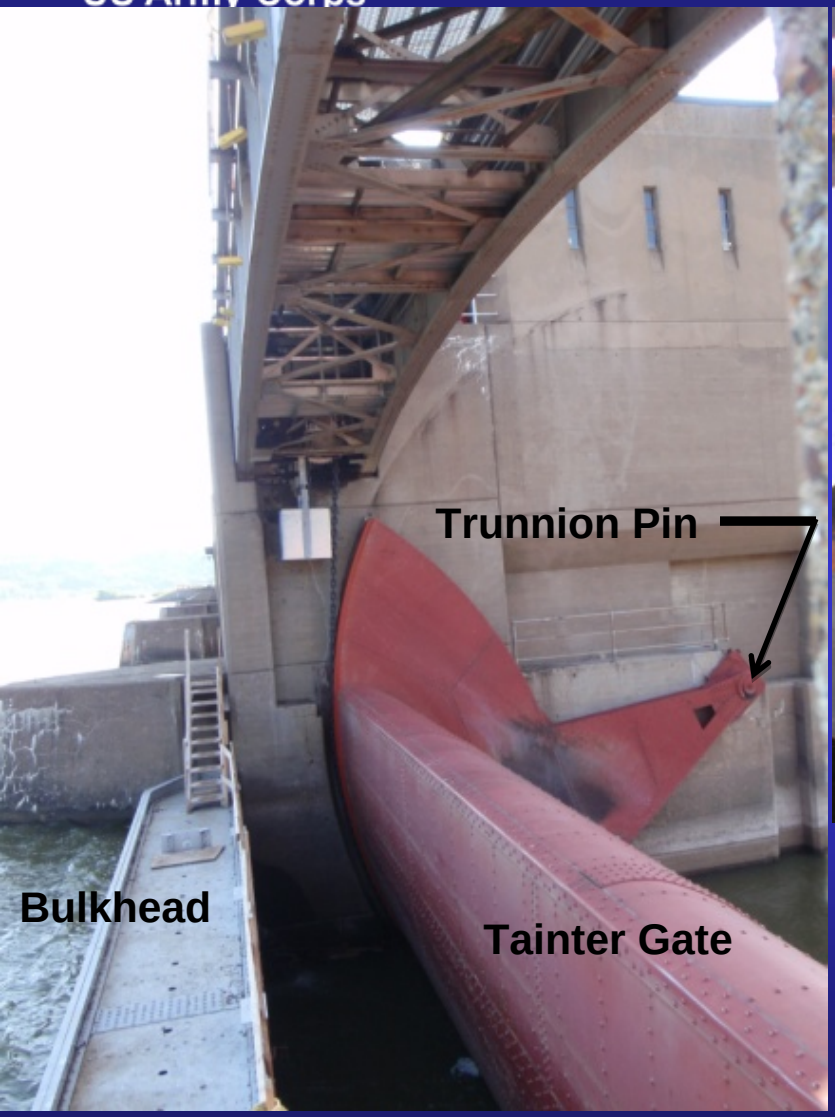

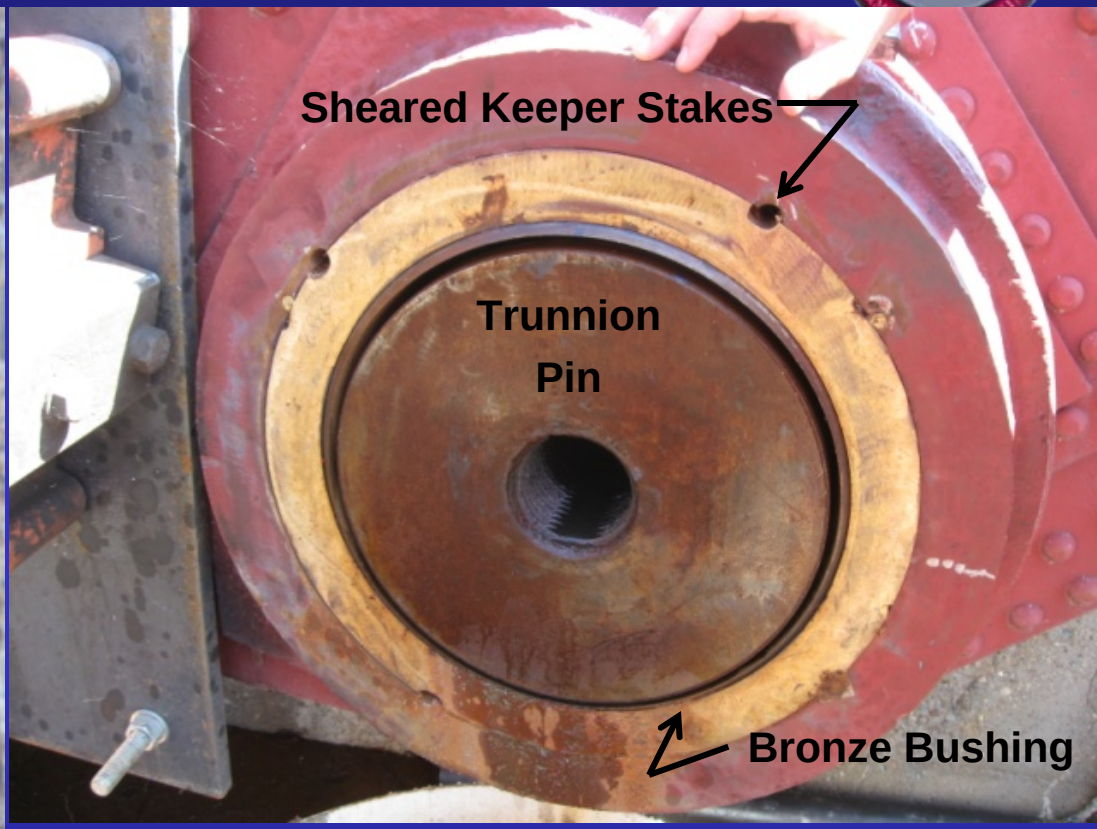

US Army Corps of Engineers®

Existing Conditions

US Army Corps of Engineers®

Existing Conditions

US Army Corps of Engineers®

Existing Conditions

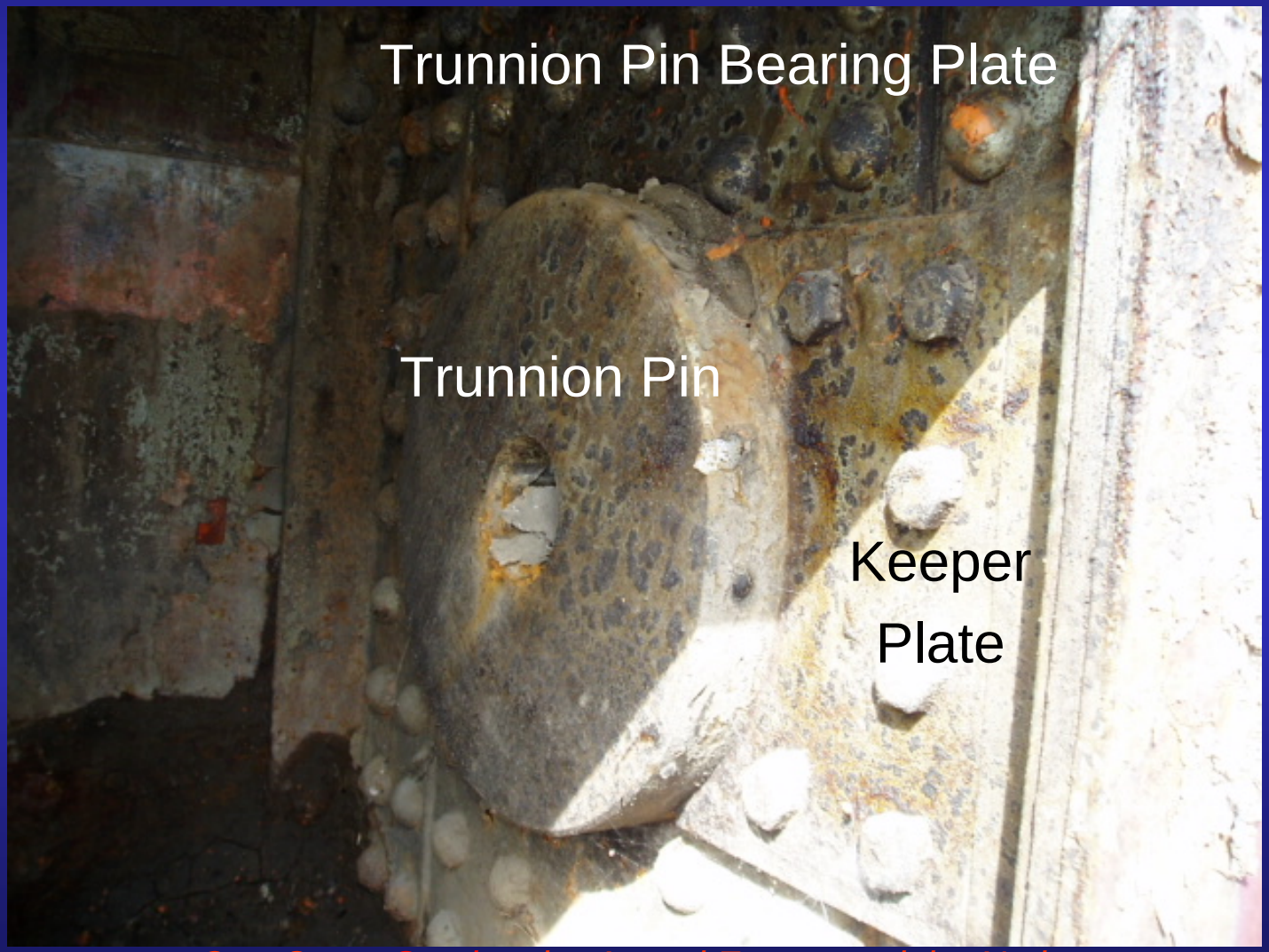

US Army Corps of Engineers®

Existing Conditions

Trunnion Box Corrosion

Design Challenges

- Tainter Gate Support

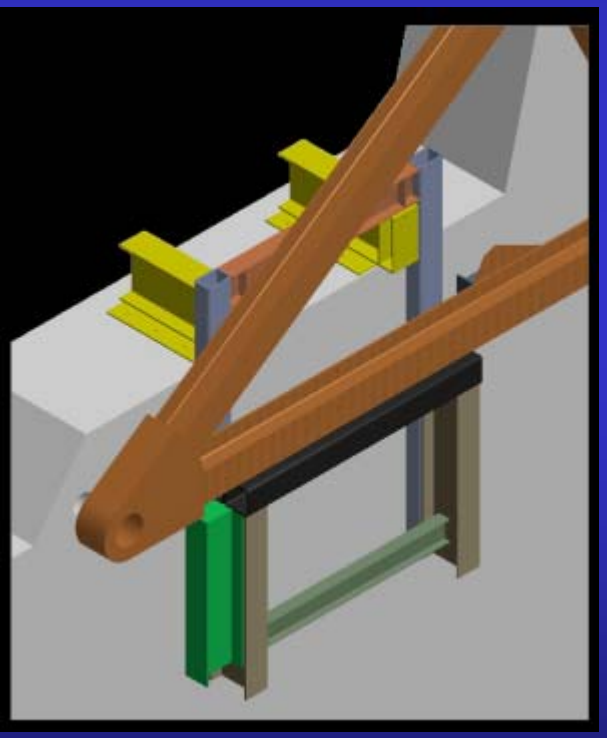

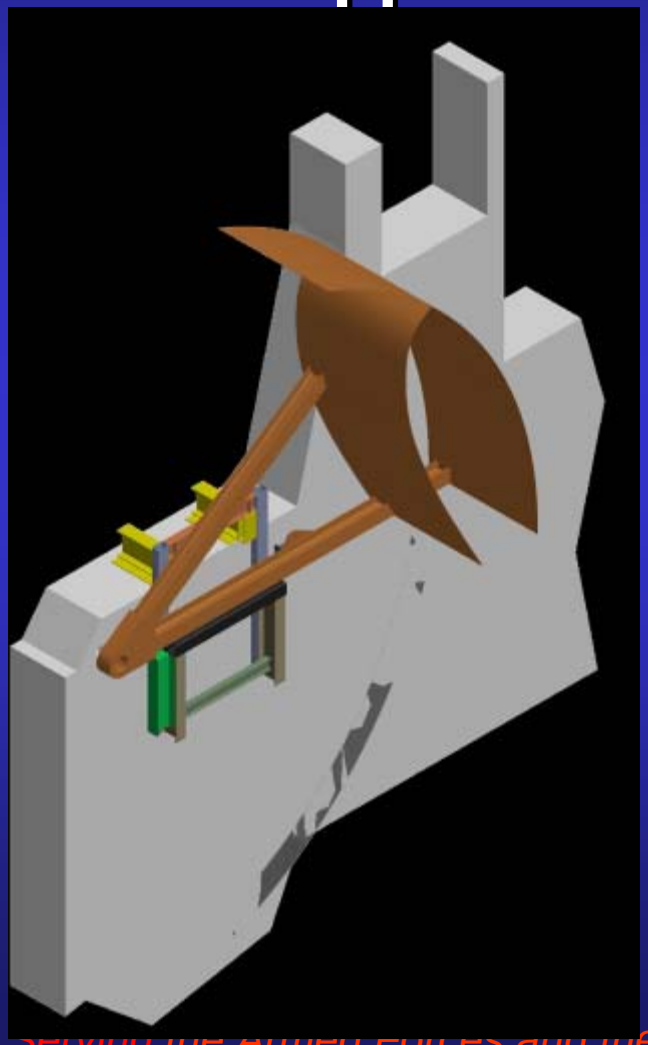

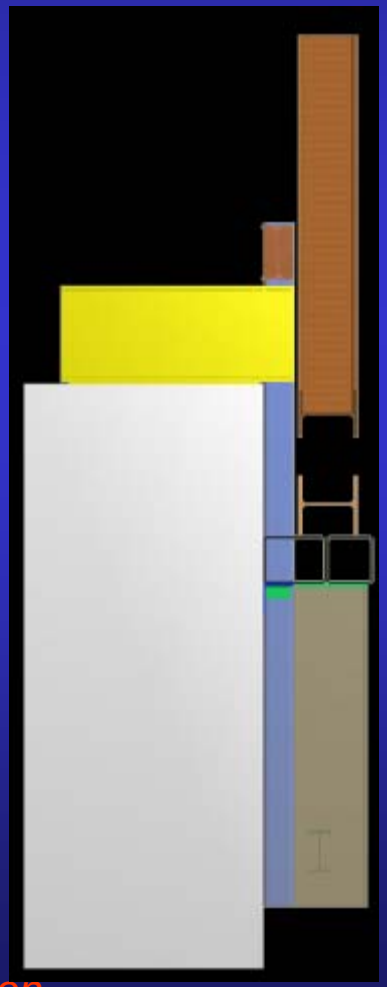

Design Challenges

- Tainter Gate Support

Design Challenges

- Trunnion Pin Removal – Jacking
  - Bearing Plate Protection

Design Challenges

- Trunnion Pin Removal – Core Drilling
  - Trunnion Pin: 5’-8” Length, 14” – 14.5” Dia.

Design Challenges

- **Trunnion Pin – Material Selection**

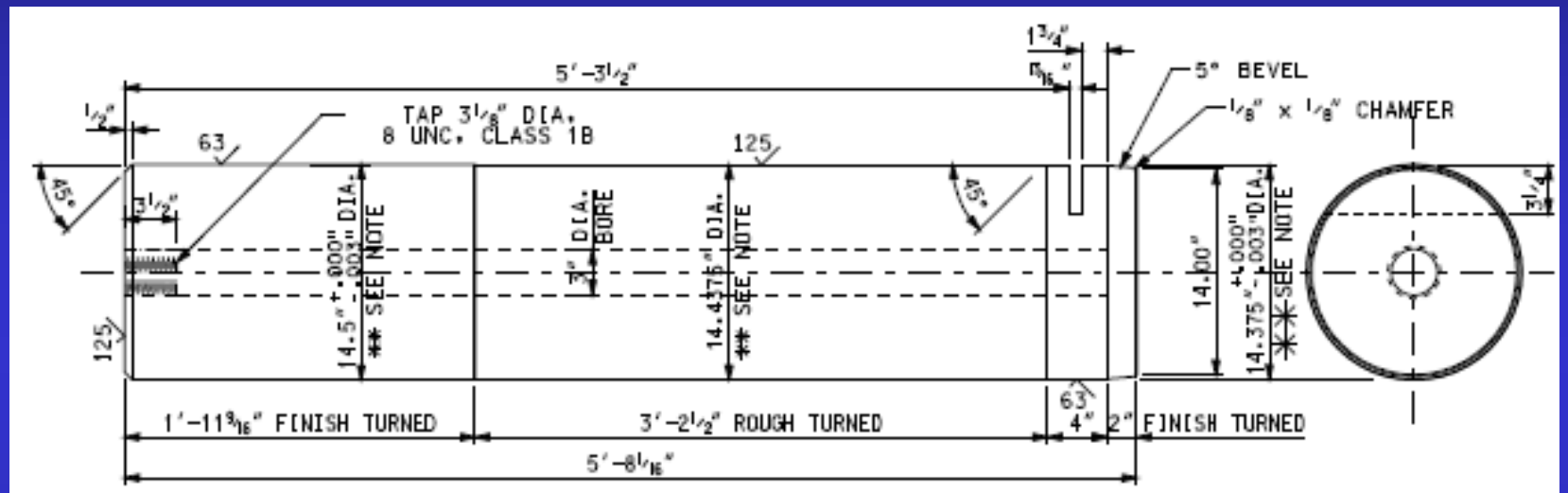

** NOTE: THE CONTRACTOR SHALL NOT FINAL TURN THE TRUNNION PIN UNTIL DIMENSIONS OF THE BUSHING AND EXISTING TRUNNION ANCHORAGE PLATES HAVE BEEN COORDINATED AND MEASURED. THE TRUNNION PIN AND BUSHING SHALL BE FURNISHED WITH AN RC6 FIT. THE TRUNNION PIN AND EXISTING TRUNNION ANCHORAGE PLATES SHALL BE FURNISHED WITH A MAXIMUM LC2 FIT.

TRUNNION PIN

1 0 1
SCALE IN FEET

101	2	TRUNNION PIN MATERIAL: ALLOY STEEL FORGING, ASTM A668, CLASS G, GRADE X4, OR ASTM A322, UNS G41300, WATER QUENCHED 1575° AND TEMPERED 1100°F. MIN. TENSILE: 80,000 PSI HARDNESS: 163-207 BHN MIN. YIELD: 50,000 PSI WT. 2930 LBS
102	2	TRUNNION BUSHING MATERIAL: ASTM B584 ALLOY C93200 BRONZE

Design Challenges

- Working Access
  - Working Over Water and Outdoors
  - Blind and Inaccessible Spaces
  - High Water Events

US Army Corps of Engineers®

Field Challenges

- Core Bit – Drift in Cutter Bit over Length
- Pin Removal – Wire Sawing required
- Bearing Plates - Out of Round and Untrue
- Interior Trunnion Box Corrosion
- Bent Trunnion Arm / New Pin Alignment
- Pin Reinstallation Guide Support
- Tight Tolerances / Freezing Pin

Field Challenges

- Core Bit – Drift in Cutter Bit over Length

US Army Corps of Engineers®

Field Challenges

- Pin Removal – Wire Sawing required thru holes cut into blind section.
- Mechanical Cutting Damage of Casting & Bearing Plates during Bushing Removal

US Army Corps of Engineers®

Field Challenges

- Bearing Plates - Out of Round and Untrue
- Interior Trunnion Box Corrosion

US Army Corps of Engineers®

Field Challenges

- Bent Trunnion Arm / New Pin Alignment
- Pin Reinstallation Guide Support

Field Challenges

- Bent Trunnion Arm / New Pin Alignment
- Pin Reinstallation Guide Support

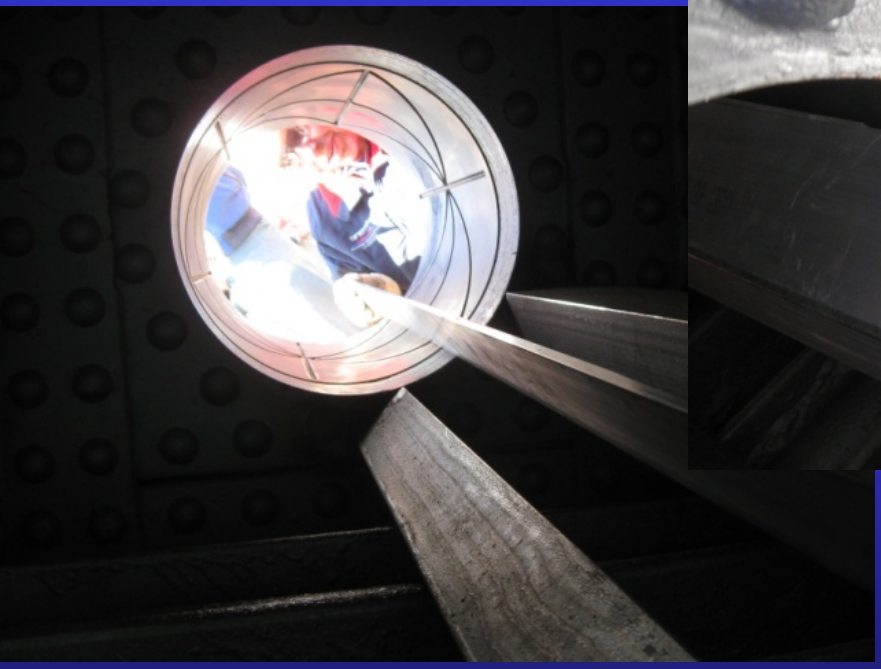

US Army Corps of Engineers®

Modifications

- Additional Grease Line thru Casting - $4K
- Revised T.G. Support Method – Credit $23K
- Additional Keeper Plates - $7K
- Trunnion Box Rust Inhibitor Protection $66K

  Product : Rust Bullet Standard Formula

  Add'l Grease Delivery in Bushing - $3.5K

  (WORK ABOVE IS FOR (4) TAINTER GATES)

- Trunnion Casting Rivet Replacement - $45.7K

  (WORK ABOVE IS FOR (1) SIDE TAINTER GATE #14)

US Army Corps of Engineers®

Modifications

US Army Corps of Engineers®

Modifications

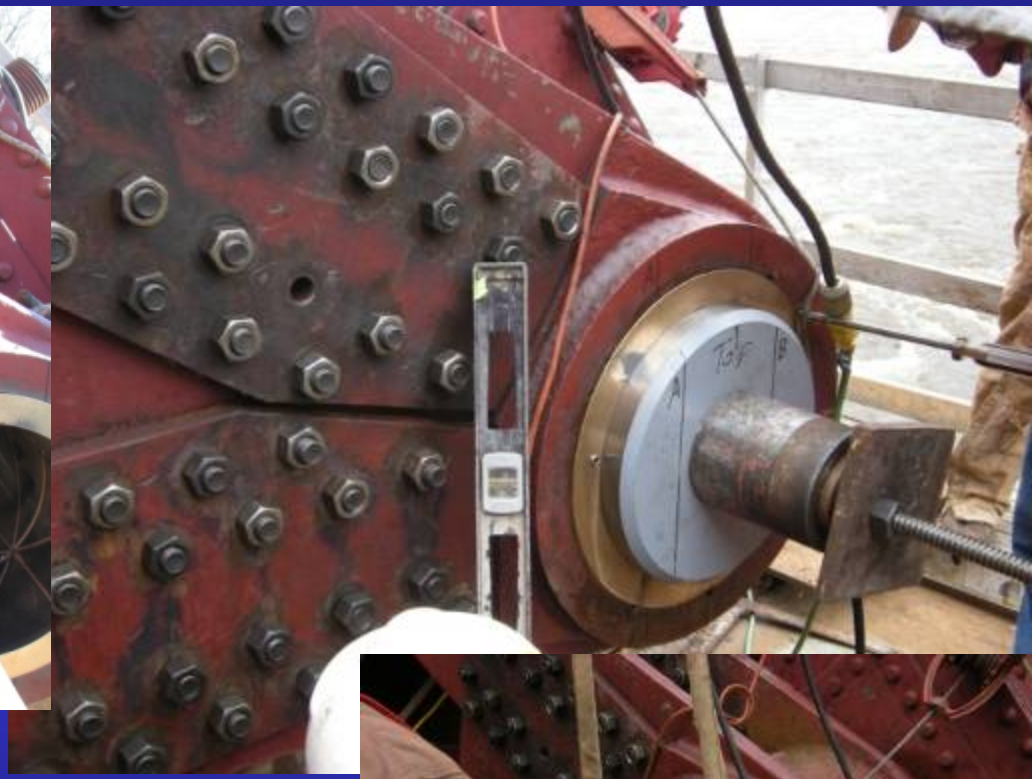

US Army Corps of Engineers®

Lessons Learned

- Design Bushing for Internal Grease Delivery
- Anticipate Misalignment in Trunnion Arms
- Anticipate Severity of Corrosion
- Provide Flexibility in Tolerances
- Provide Internal Pin Support for Reinstallation

US Army Corps of Engineers®

Trunnion Pin and Bushing Replacement

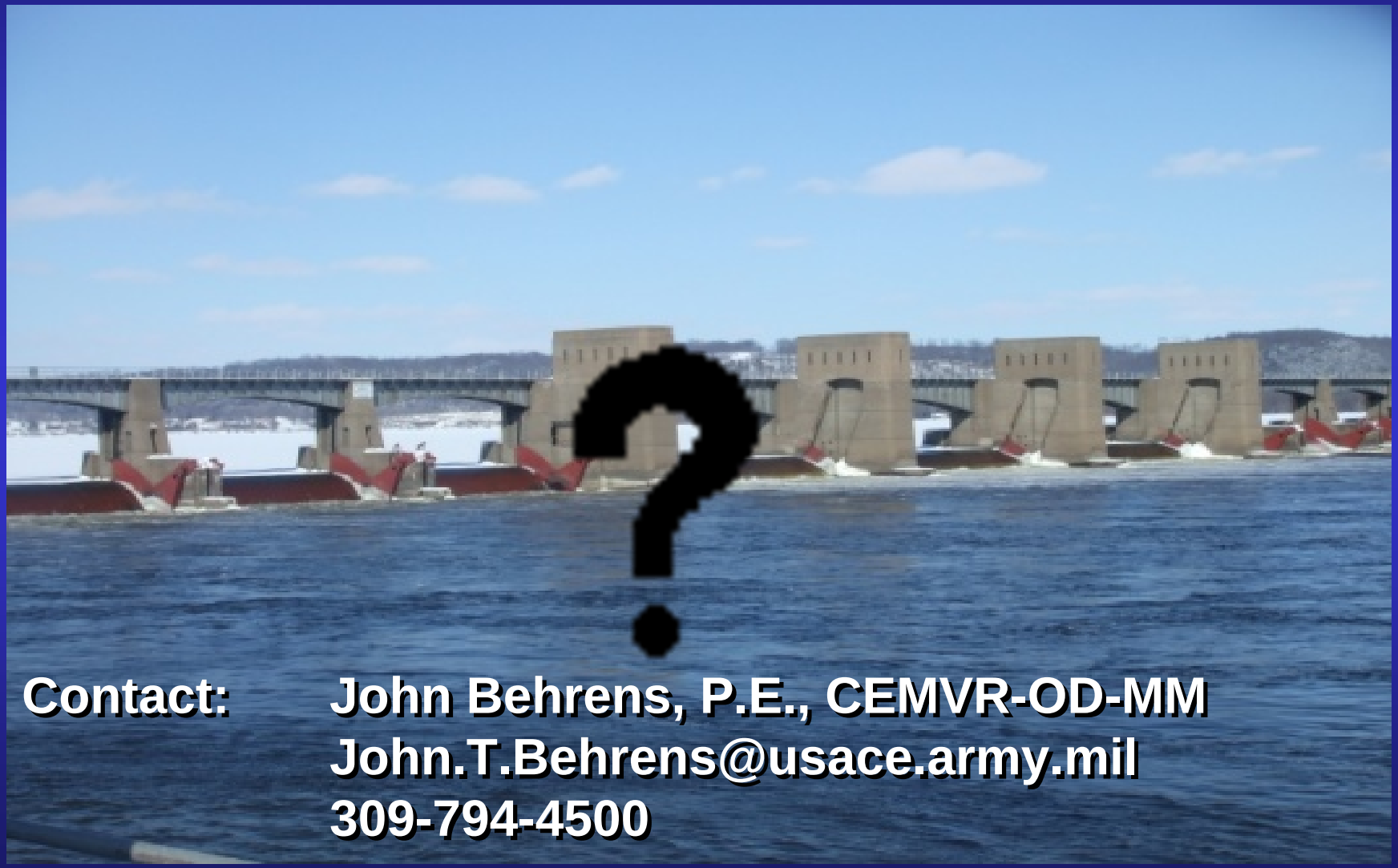

Contact: John Behrens, P.E., CEMVR-OD-MM
John.T.Behrens@usace.army.mil
309-794-4500

US Army Corps
of Engineers®

A
B
A
Top
B

10/28/2010 11